Rear Wiper/Washer
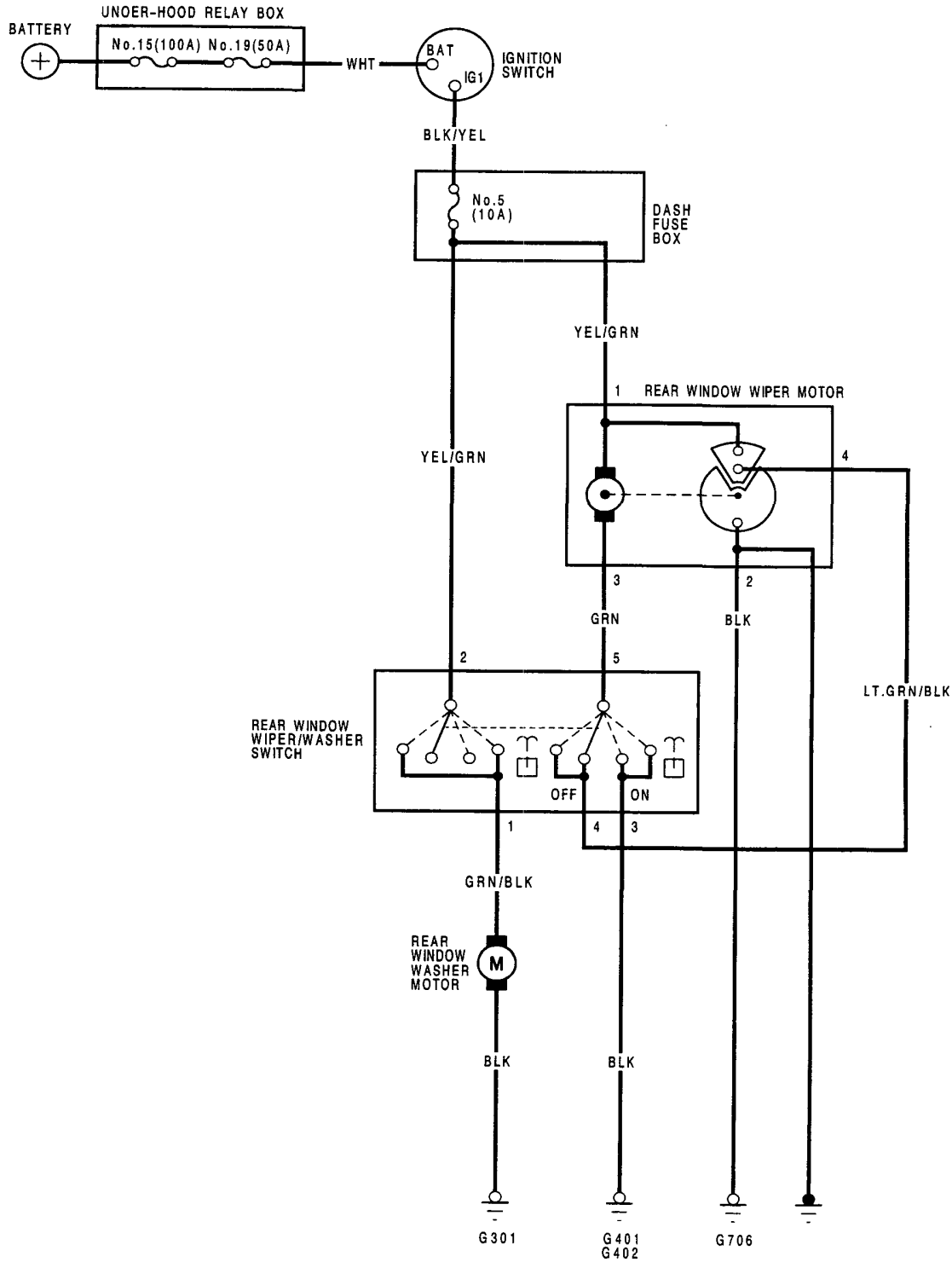
Circuit Diagram